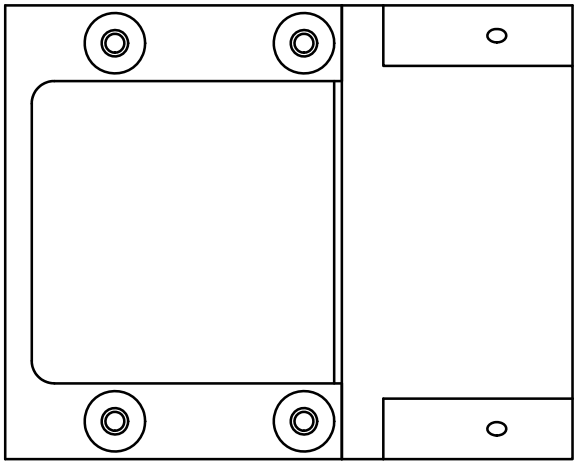

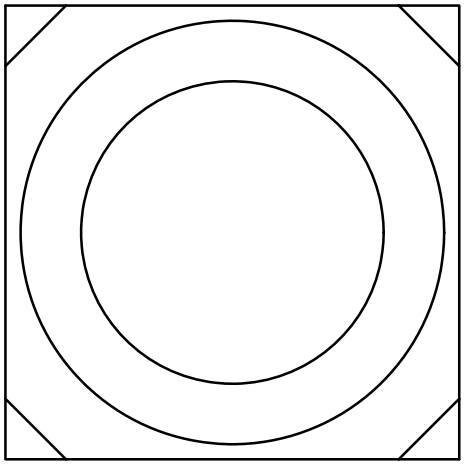

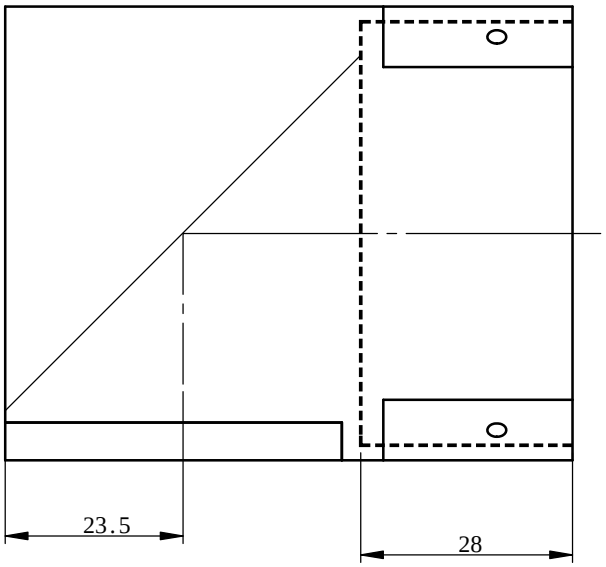

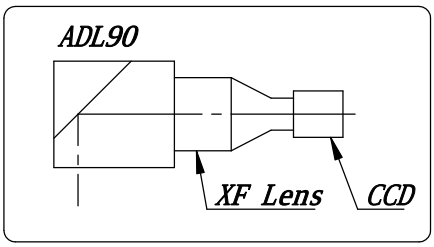

CAN-RILL OPTICS