ḱ ƀ

: ť φ

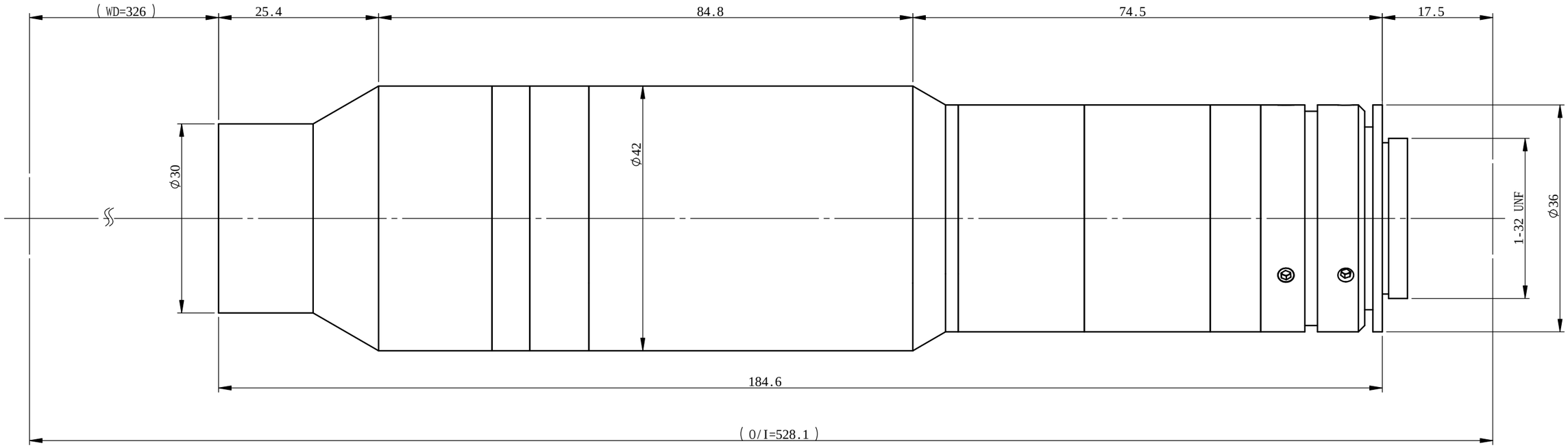

XF-MH045X326

Ò	0.45
	Ü 24.4mm
˝E	Ü 11mm
ƀ	326mm ¤ 3%
	3.2mm
ψ حي	F6.5
№ Ꞩ	9.5 ë m
˝E MTF	>0.3@145lp/mm
ψ 1	<0.012%

	نشم			
2/3'	8.45	7.07	18.8	15.7mm
1/1.8'	7.2	5.3	16.0	11.8mm
1/2'	6.4	4.8	14.2	10.7mm
1/3'	4.8	3.6	10.7	8.0mm

̀E		̀E	Ð Ղ		
X.X	¤ 0.2	¤ 30min	XF-MH045X326-		
X.XX	¤ 0.02		طي Ղ		
X.XXX	¤ 0.005	طي ˊ A3			
	Ղ	/ ˍ		ŋ	˝ سِ Ղ
				1.5:1	
1					ψ
2			˝		CAN-BILL OPTICS