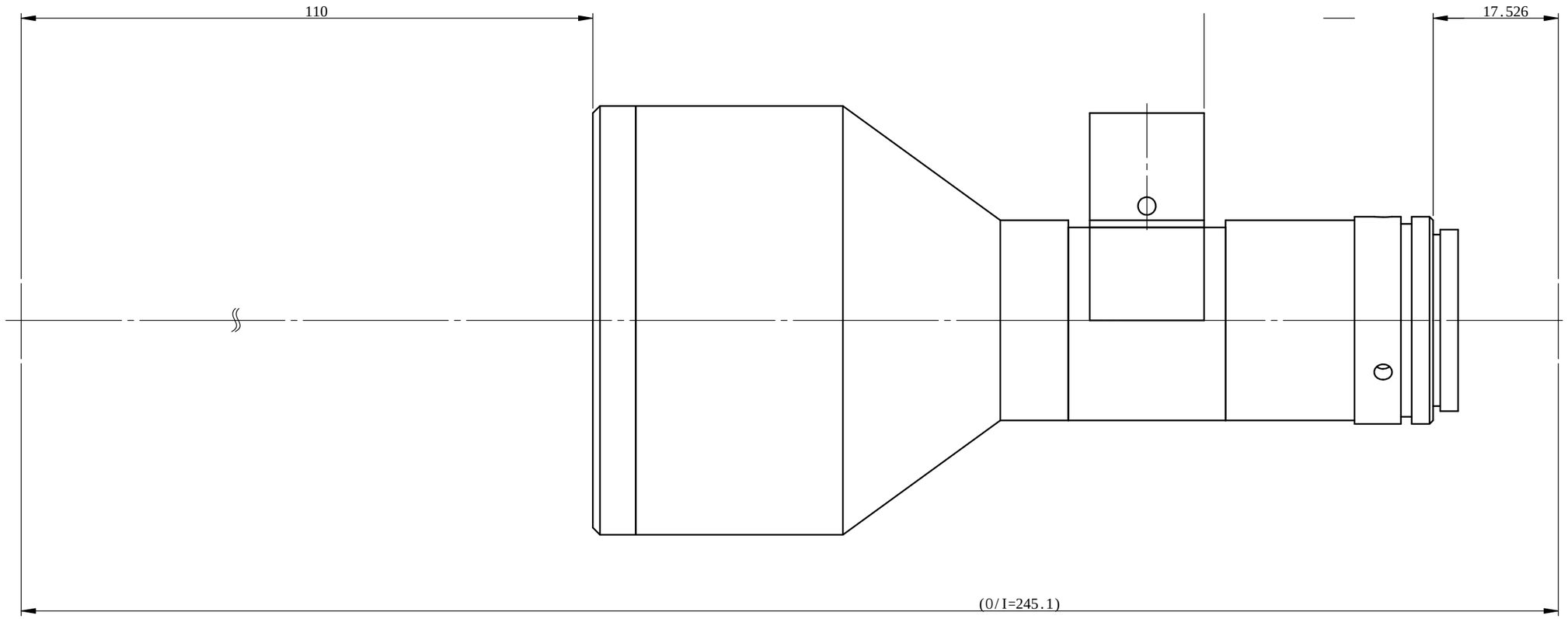

CAN-RILL OPTICS